# 3M™ RIGHT ANGLE SOCKET AND POWER MALE MODULE FOR MicroTCA APPLICATIONS

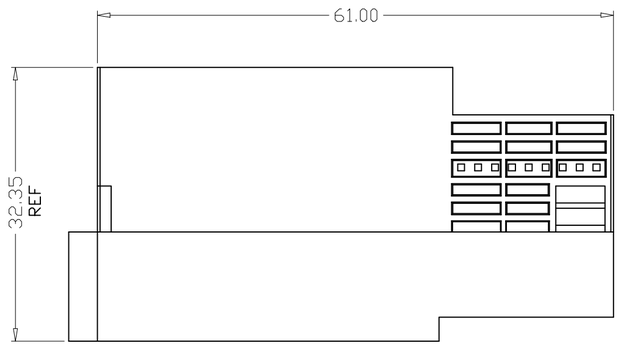


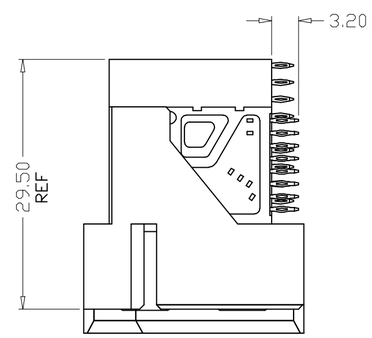


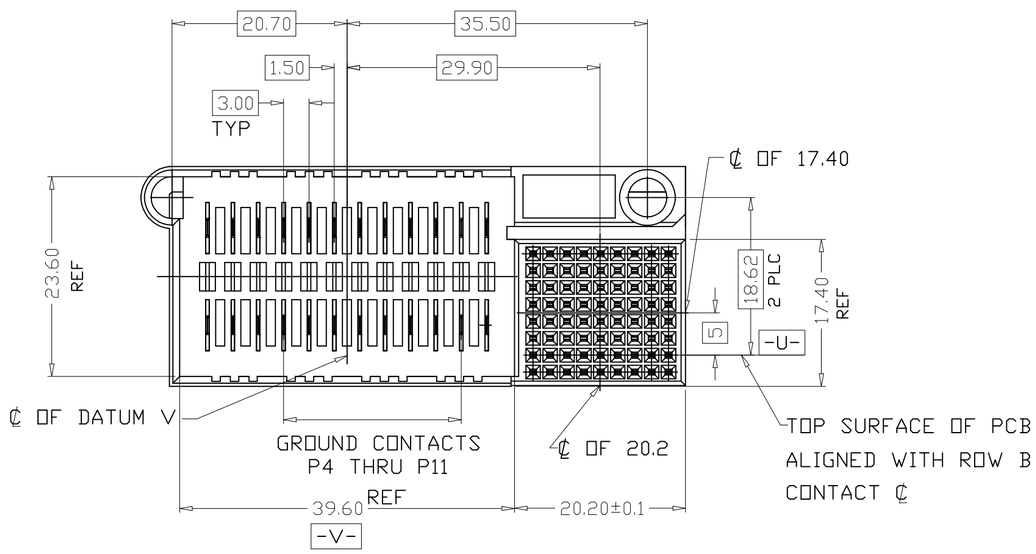


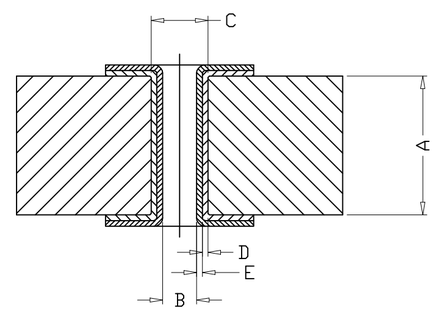


PLATED THROUGH-HOLE CROSS SECTION (NOT TO SCALE)

7

| | HOLE PLATING TABLE | Dimension |
|---|---|---|
| A | PCB Thickness | Min. 1.4mm |
| B | Plated Through Hole Dia. | 0.60 +/- 0.05mm |
| C | Drill Hole Diameter | 0.70 +/- 0.02mm |
| D | Cu Thickness | Min. 25µm |
| E | Plating Thickness | Min. 0.5µm Immersion Sn |

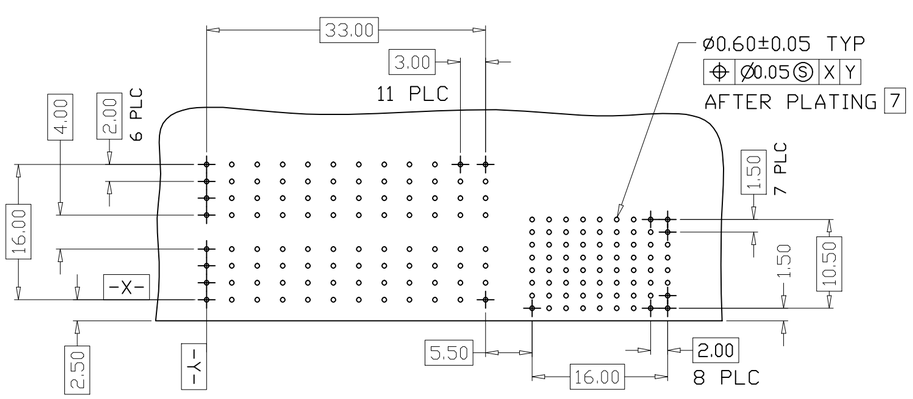


RECOMMENDED PC BOARD REQUIREMENTS

NOTES:

1. MATERIALS
   A. HOUSING: THERMOPLASTIC POLYESTER, GLASS FILLED RATED UL 94V-0, COLOR: GRAY
   B. CONTACT: COPPER ALLOY, GOLD PLATING
2. PLATING:
   -AS:
   FINISH: MATING AREA- 0.76um Au
   COMPLIANT PIN AREA-1.27um MIN MATTE Sn
   1.27um MIN Ni ALL OVER
3. RATINGS:
   A. VOLTAGE(TEST VOLTAGE): 80V r.m.s.
   B. CURRENT RATING:
   SIGNAL AND SIGNAL GND CONDUCTOR 0.625A/PIN
   POWER BRANCH GND CONDUCTOR 11.625 A/PIN
   C. MAXIMUM LINE RESISTANCES:
   SIGNAL AND SIGNAL GND CONDUCTOR 25 MILLI OHMS
   POWER BRANCH GND CONDUCTOR 5 MILLI OHMS
4. ENGAGING FORCE: 145N MAX;
   SEPARATING FORCE: 110N MAX.
5. DURABILITY: 200 MATING CYCLES
6. FOR PRODUCT SPECIFICATION AND WARRANTY INFORMATION SEE 78-5102-0084-9
7. PCB HOLE DIMENSIONS
8. SEE THE REGULATORY INFORMATION APPENDIX (RIA) IN THE "RoHS COMPLIANCE" SECTION OF: WWW.3MCONNECTOR.COM FOR COMPLIANCE INFORMATION (RIA E1 & C1 APPLY).
9. REFERENCE DOCUMENT 78-9101-3345-9
10. IN THE EVENT OF CONFLICT BETWEEN THIS DATA AND THAT CONTAINED IN THE PRODUCT SPEC., THE PRODUCT SPEC. TAKES PRECEDENT.
11. PART NUMBER: 1P01-1110-AS
12. FOR MATING PRODUCT USE:
    1P02-11X0-XX MicroTCA BACKPLANE HEADER AND POWER FEMALE MODULE

| REV | ECO | ISSUE DATE AND DESCRIPTION | DRFT | CHKD |
|---|---|---|---|---|
| B | 33179 | REMOVED-HM PLATING AND 2.25mm CONTACT OPTIONS | ML | TS |

DESIGN REFERENCE | NEXT ASSEMBLY | DISTRIBUTION CODES

DRFT ML DATE 10/05/10 | MFG | DATE
CHKD TS DATE 10/05/10 | APPVL | DATE

DIVISION | DIVISION CODE

DO NOT SCALE DRAWING | SCALE ——

TOLERANCES EXCEPT AS NOTED
INCHES
.0 ± *
.00 ± *
.000 ± *
.0000 ± *
MILLIMETERS
0 ± *
.0 ± 0.3
.00 ± 0.20
.000 ± 0.100
ANGLES ± 1°

THIRD ANGLE PROJECTION

INTERPRET PER ASME Y14.5 – 1994

MAX SURFACE ROUGHNESS
☐ ALL SURFACES
☐ MARKED ONLY

3M Center St. Paul, MN 55144

© 3M COPYRIGHT
This document is the copyrighted property of the 3M Company and may not be reproduced without 3M written permission or used for other than 3M authorized purposes.

TITLE
1P01-1110-AS MicroTCA RIGHT ANGLE SOCKET AND POWER MALE MODULE

CAGE NUMBER | SIZE C | DRAWING NO. 78-5100-2367-0 | REV. B

MODEL | DET. LISTS ☐ YES ☐ NO | SHT 1 OF 1